REPAIR PARTS

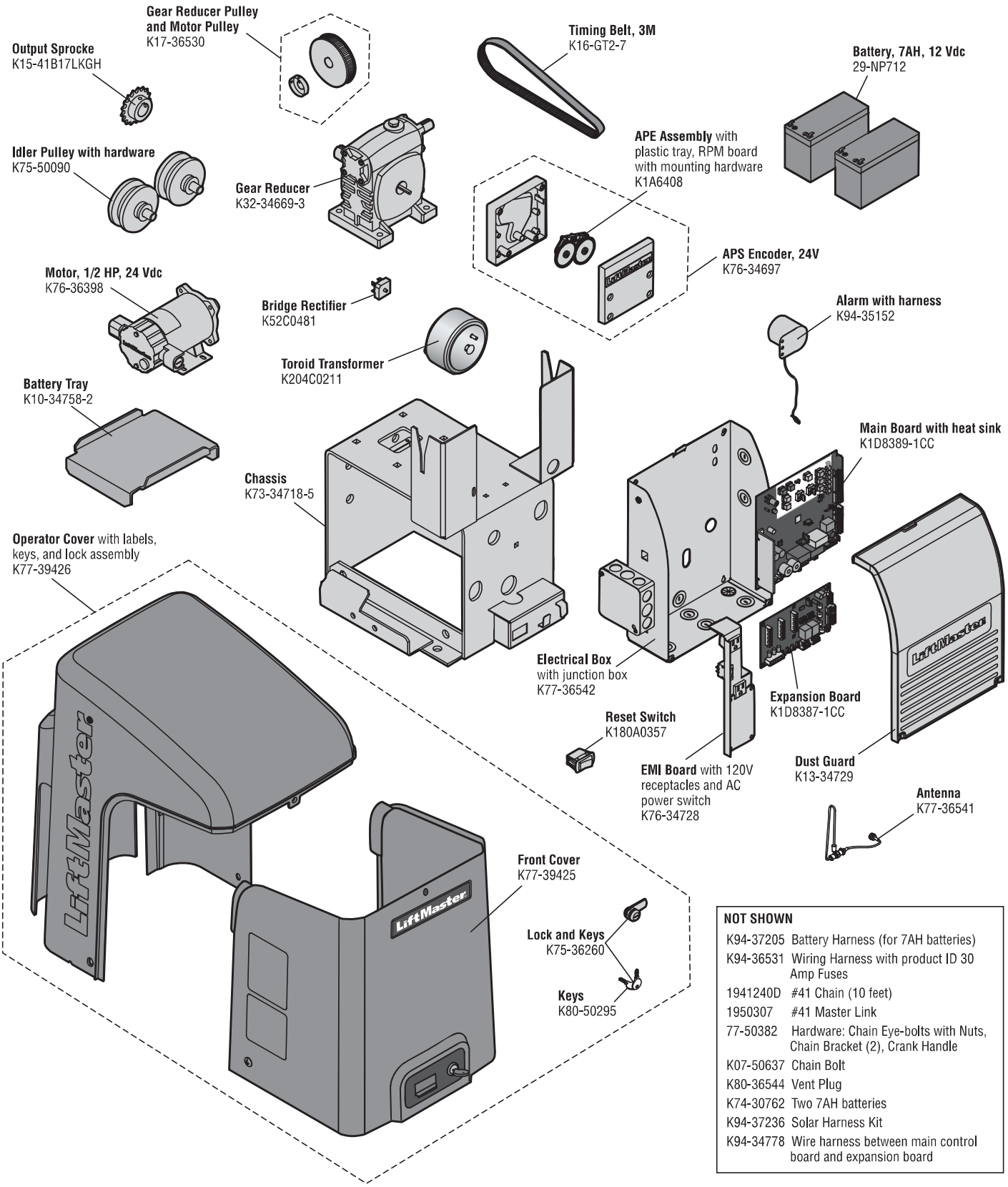

NOT SHOWN

K94-37205	Battery Harness (for 7AH batteries)
K94-36531	Wiring Harness with product ID 30 Amp Fuses
1941240D	#41 Chain (10 feet)
1950307	#41 Master Link
77-50382	Hardware: Chain Eye-bolts with Nuts, Chain Bracket (2), Crank Handle
K07-50637	Chain Bolt
K80-36544	Vent Plug
K74-30762	Two 7AH batteries
K94-37236	Solar Harness Kit
K94-34778	Wire harness between main control board and expansion board