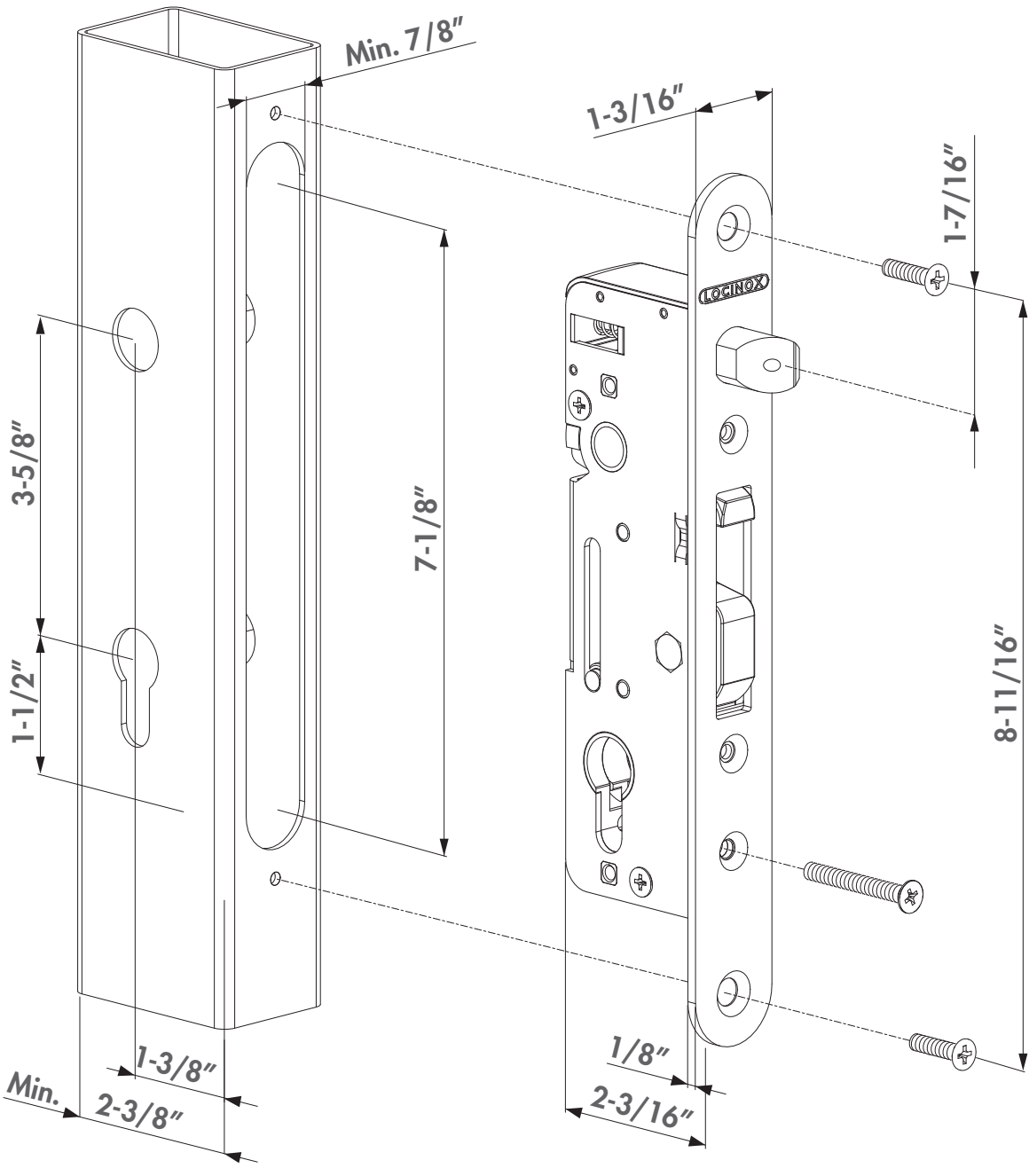
Min. 7/8"
1-3/16"
1-7/16"
LOCINOX
3-5/8"
7-1/8"
1-1/2"
8-11/16"
1-3/8"
Min.
2-3/8"
1/8"
2-3/16"