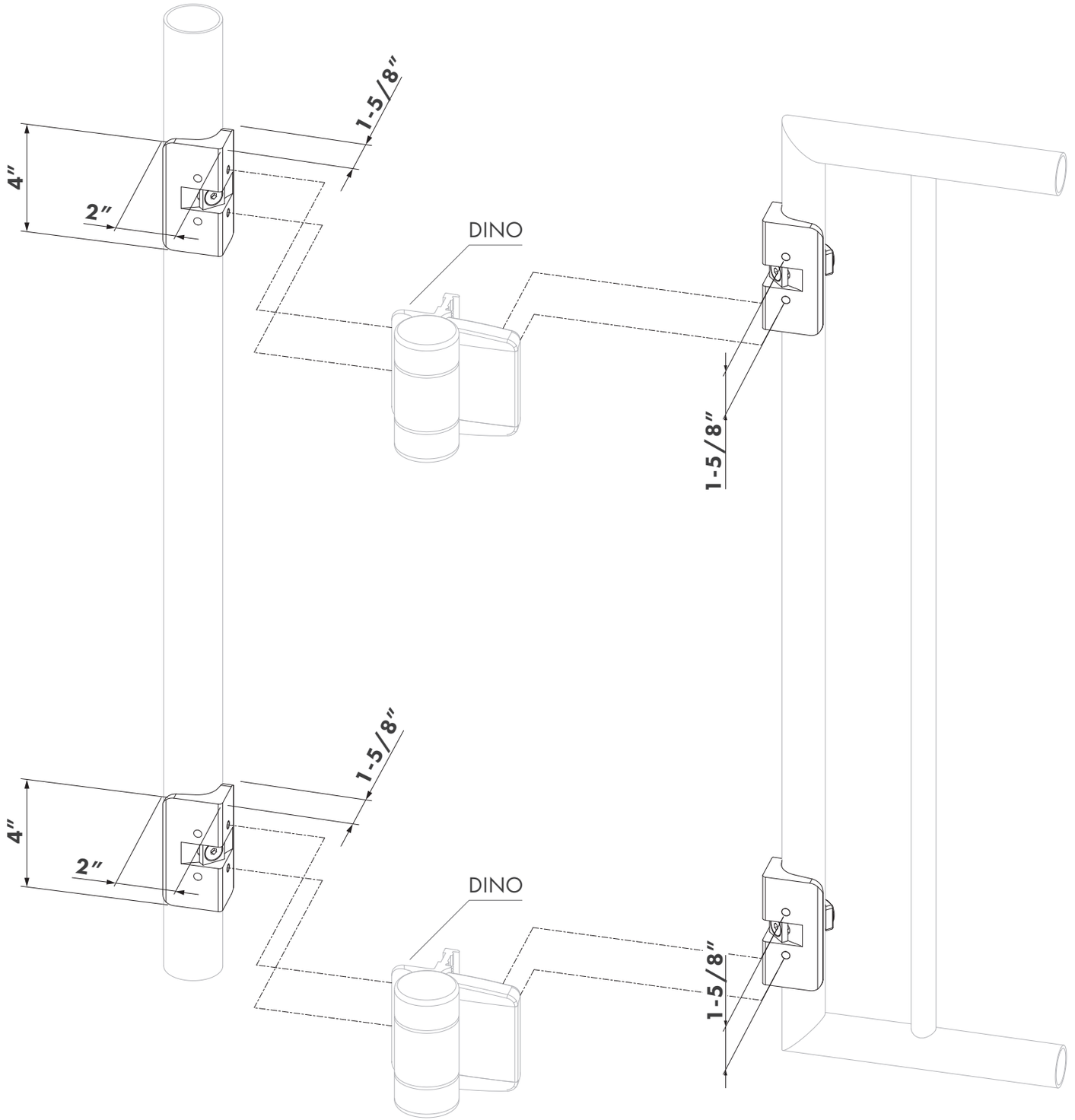
1-5/8"
4"
2"
DINO
1-5/8"
1-5/8"
4"
2"
DINO
1-5/8"