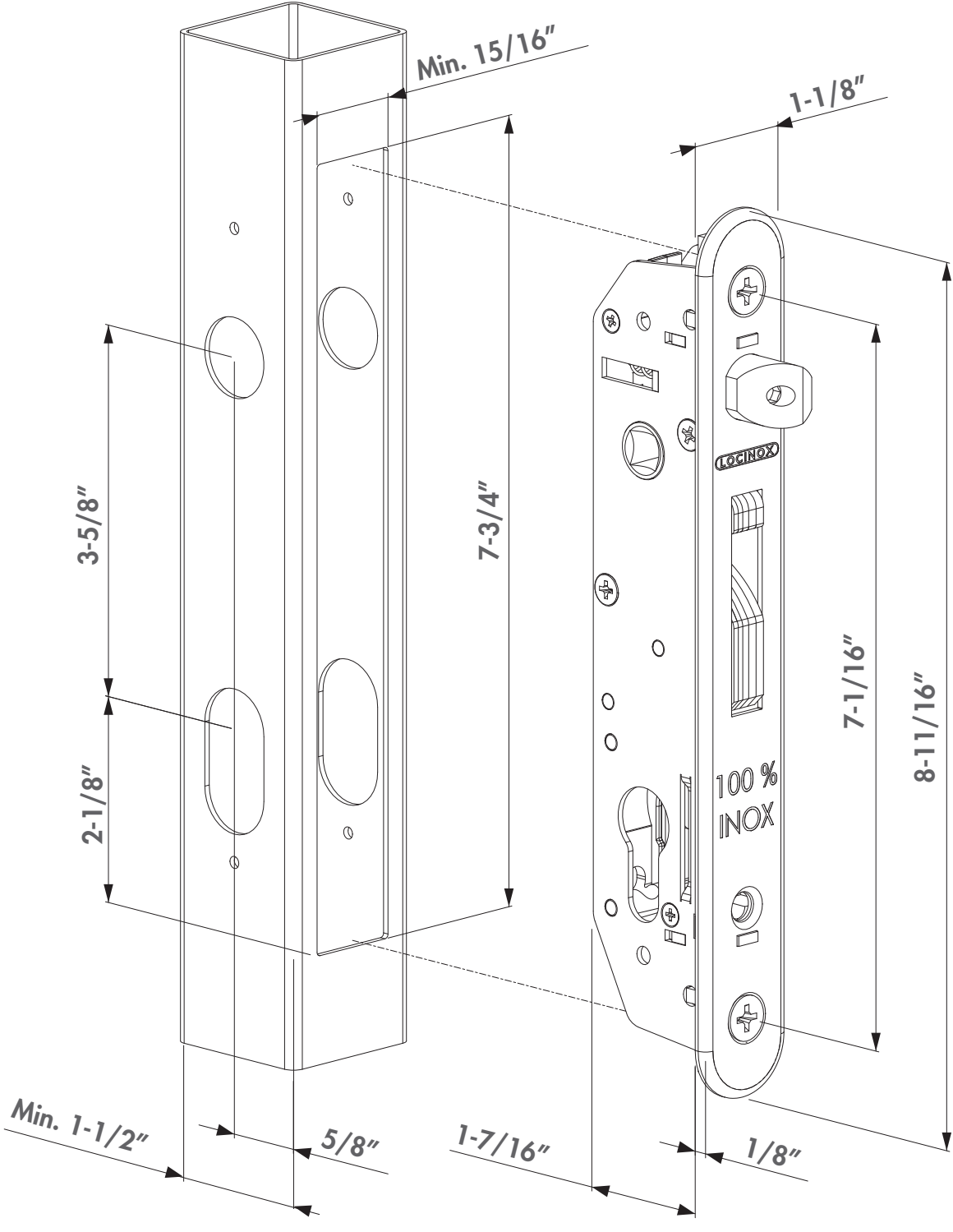
Min. 15/16"
1-1/8"
3-5/8"
7-3/4"
2-1/8"
7-1/16"
8-11/16"
LOCINOX
100 %
INOX
Min. 1-1/2"
5/8"
1-7/16"
1/8"