Product & Packaging Specs

Assembly, 4x4 Twin Rail Saddle

Item #: 56630

ITEM NO.	QTY.	PART NUMBER	DESCRIPTION
1	2	56630-11	Plate, 4x4 Rail Saddle
2	2	56607-15	Plate, 4x4 Side Compression
3	6	56625	OWT Timber Screw 1-3/4"
4	1	56607-11	Assembly, 4x4 Stand Off
5	2	56641-12	Bracket, 2x4 Top Rail Saddle
6	6	56621	1 1/2" Hex Cap Nut
7	12	80014	Screw, FHP #12 X 1.25", Black

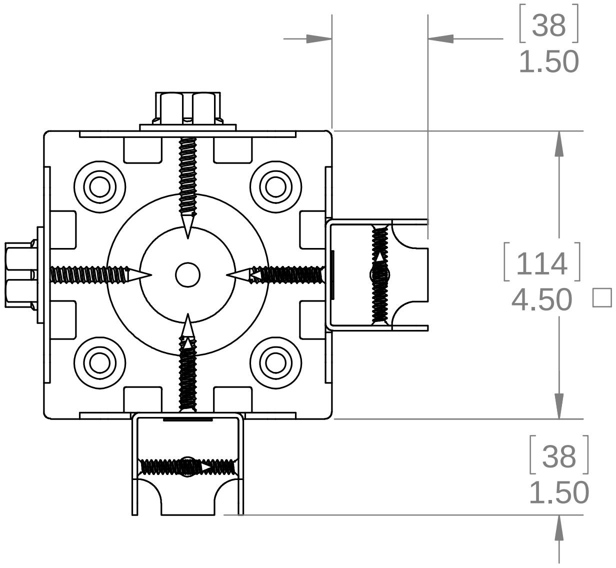

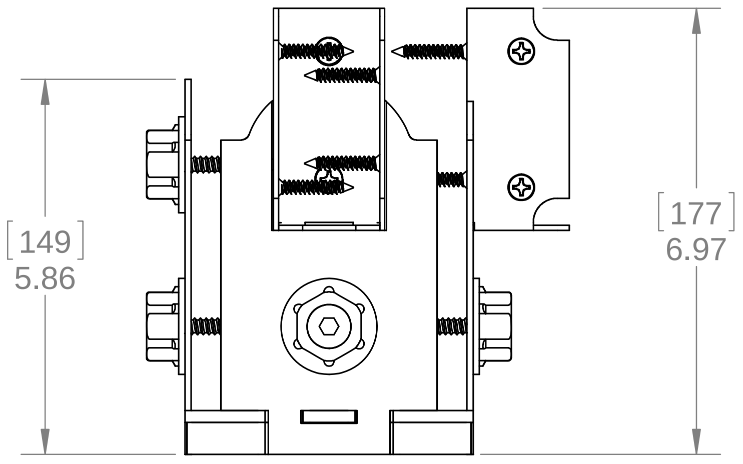

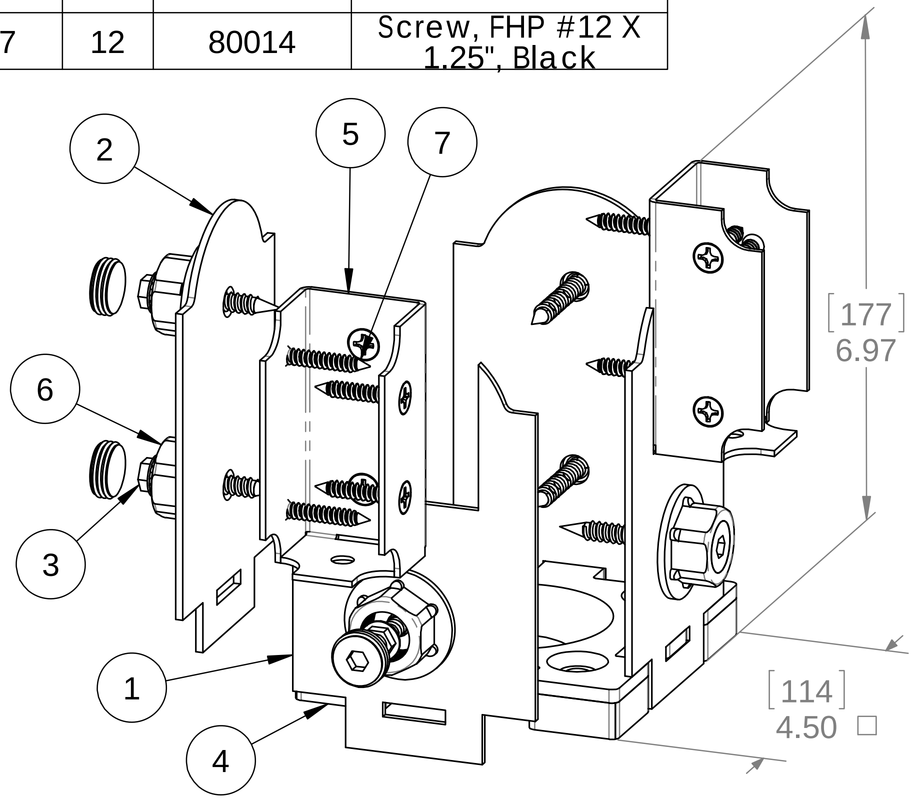

Weight: 4.01 LBS
Scale: 1:2
Last updated: 7/14/2015

V1.00 - Installation Instructions effective May 1, 2015 and reflects information that available as of April 10, 2014. This information is updated periodically and should not be relied upon after May 1, 2015. Please visit www.OZCOBP.com to get current information

Product & Packaging Specs

Assembly, 4x4 Twin Rail Saddle

Item #: 56630

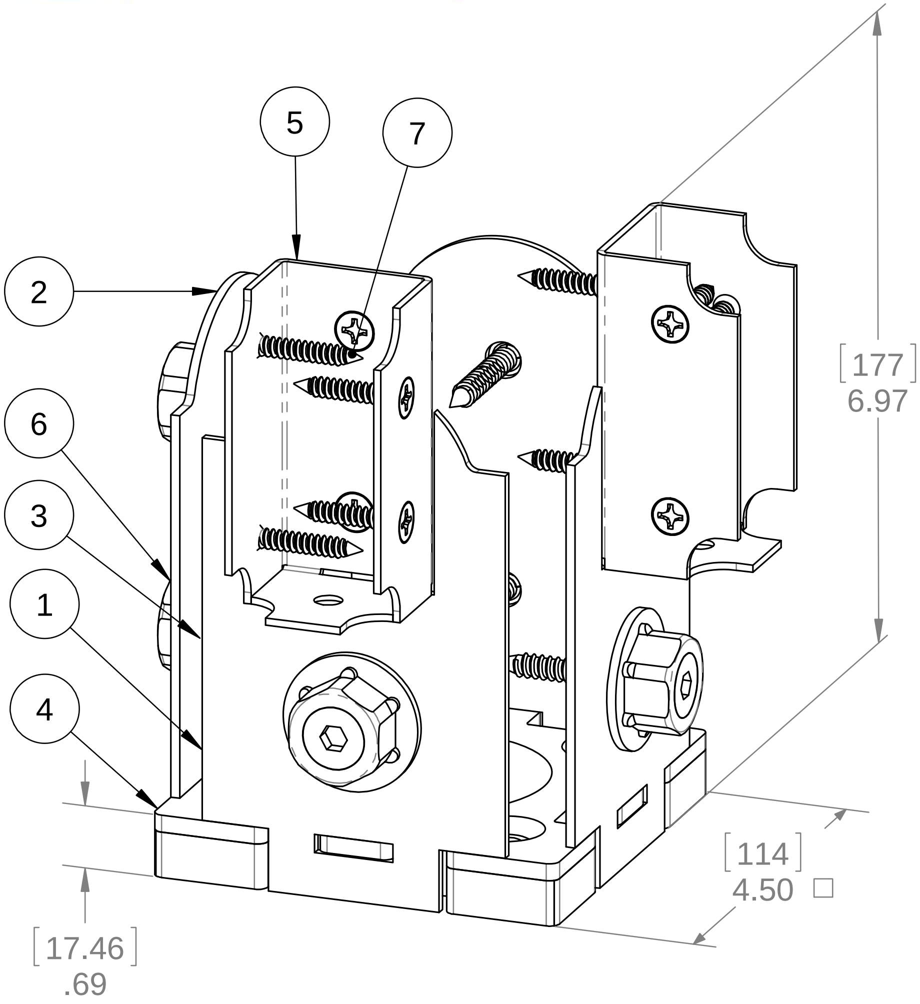
5
7
2
6
3
1
4
[177]
6.97
[114]
4.50 □
[17.46]
.69

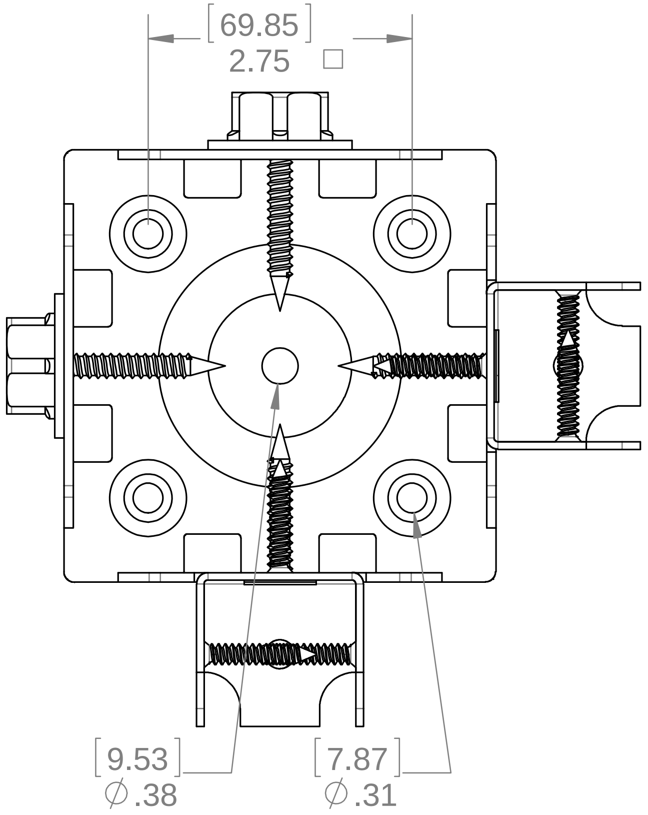
[69.85]
2.75 □
[9.53]
∅.38
[7.87]
∅.31

Weight: 4.01 LBS
Scale: 1:2
Last updated: 7/14/2015

V1.00 - Installation Instructions effective May 1, 2015 and reflects information that available as of April 10, 2014. This information is updated periodically and should not be relied upon after May 1, 2015. Please visit www.OZCOBP.com to get current information

Product & Packaging Specs

Box, 56630

Item #: Box

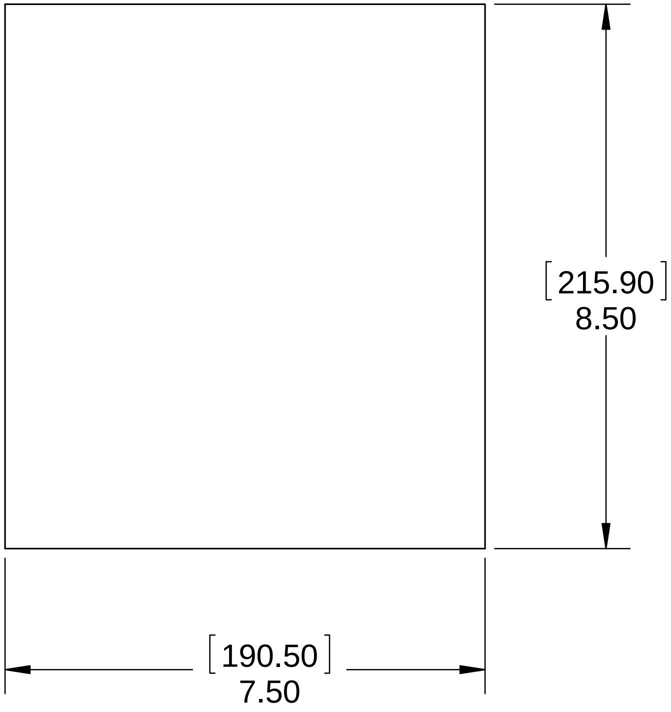
[215.90]
8.50
[190.50]
7.50

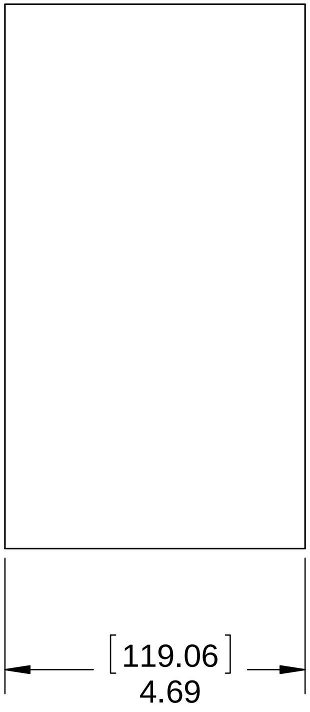

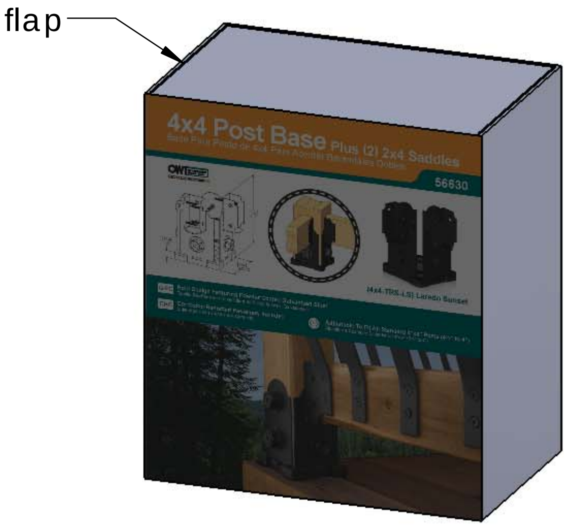
flap
4x4 Post Base Plus (2) 2x4 Saddles
56630

Material: Corrugated Paper
Finish: See Artwork
Weight: 0.12 LBS
Scale: 1:3
Last updated: 7/14/2015

V1.00 - Installation Instructions effective May 1, 2015 and reflects information that available as of April 10, 2014. This information is updated periodically and should not be relied upon after May 1, 2015. Please visit www.OZCOBP.com to get current information

Product & Packaging Specs

Insert, Rail Saddle

Item #: Insert #1

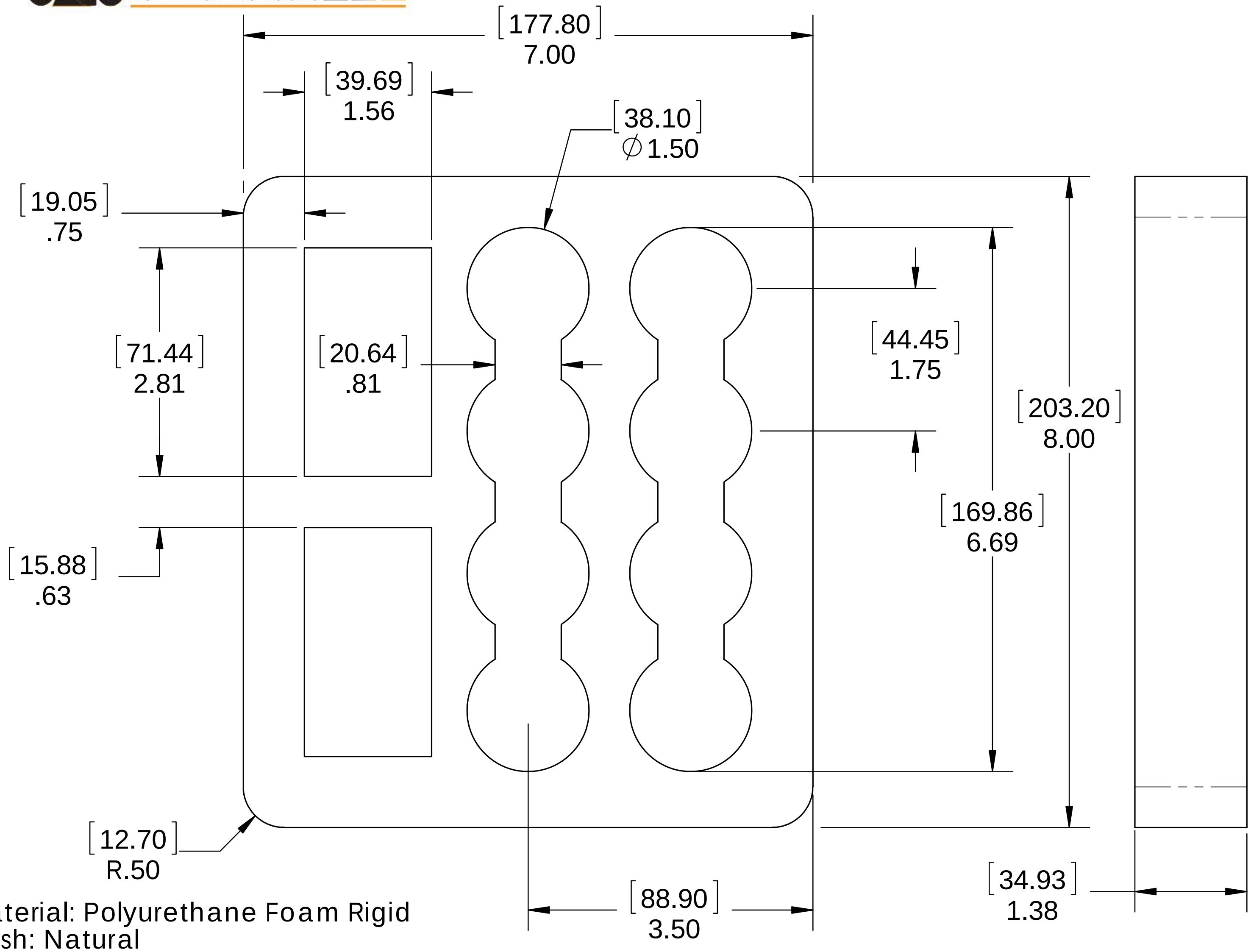

[177.80]
7.00
[39.69]
1.56
[38.10]
∅1.50
[19.05]
.75
[71.44]
2.81
[20.64]
.81
[44.45]
1.75
[203.20]
8.00
[169.86]
6.69
[15.88]
.63
[12.70]
R.50
[88.90]
3.50
[34.93]
1.38

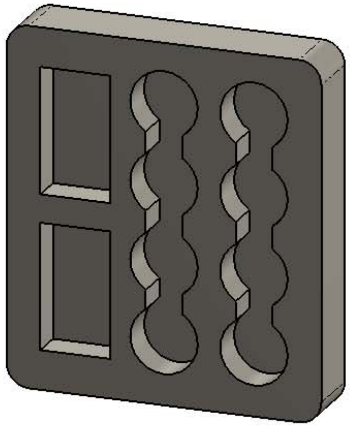

Material: Polyurethane Foam Rigid
Finish: Natural
Weight: 0.33 LBS
Scale: 1:2
Last updated: 7/14/2015

V1.00 - Installation Instructions effective May 1, 2015 and reflects information that available as of April 10, 2014. This information is updated periodically and should not be relied upon after May 1, 2015. Please visit www.OZCOBP.com to get current information

Product & Packaging Specs

56630 Packing

Item #: Box packing

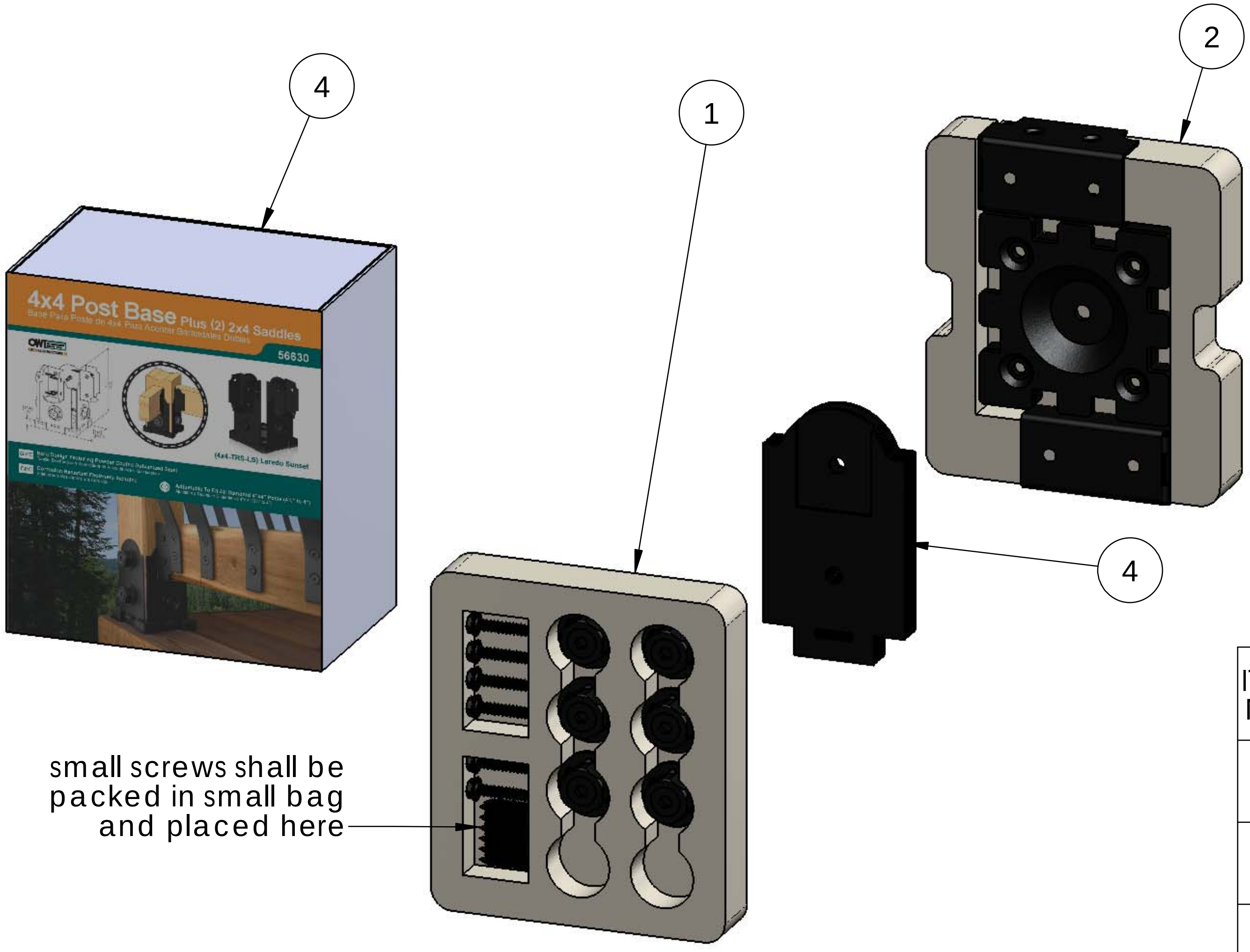

small screws shall be packed in small bag and placed here

ITEM NO.	QTY.	PART NUMBER	DESCRIPTION
1	1	Insert, Rail Saddle	Insert, Rail Saddle
2	1	Insert, Rail Saddle	Insert, Rail Saddle
3	1	56630-10	Assembly, 4x4 Twin Rail Saddle
4	1	Box, 56630	Box, 56630

Weight: 8.80 LBS
Scale: 1:4
Last updated: 7/14/2015

V1.00 - Installation Instructions effective May 1, 2015 and reflects information that available as of April 10, 2014. This information is updated periodically and should not be relied upon after May 1, 2015. Please visit www.OZCOBP.com to get current information

OWT Ornamental Wood Ties
OZCO BUILDING PRODUCTS

Product & Packaging Specs

Case, Rail Saddle

Item #: Case

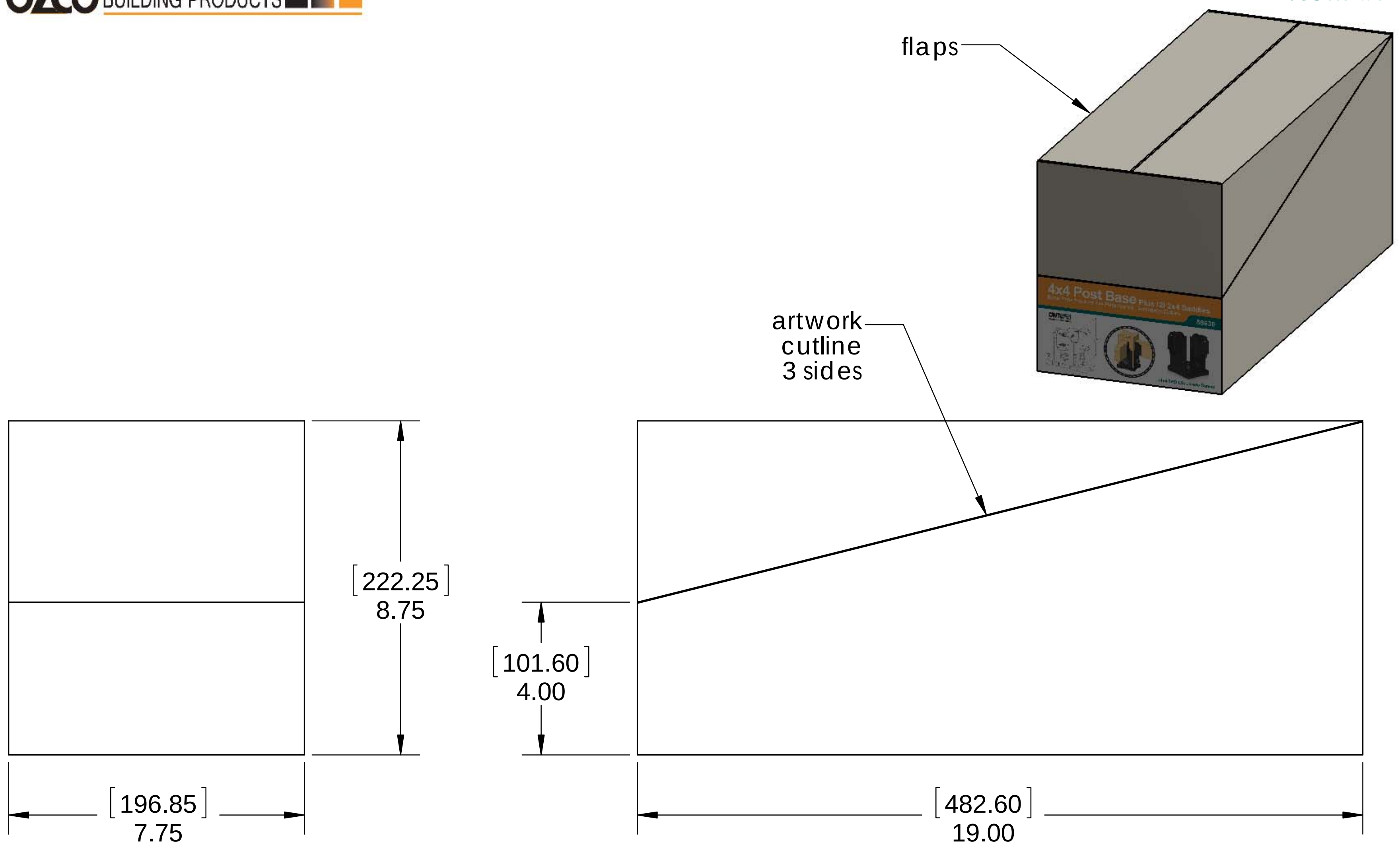
flaps
4x4 Post Base
artwork
cutline
3 sides
[222.25]
8.75
[101.60]
4.00
[196.85]
7.75
[482.60]
19.00

Material: Corrugated Paper
Finish: Natural
Weight: 0.22 LBS
Scale: 1:4
Last updated: 7/14/2015

Product & Packaging Specs

56630 Packing

Item #: Case packing

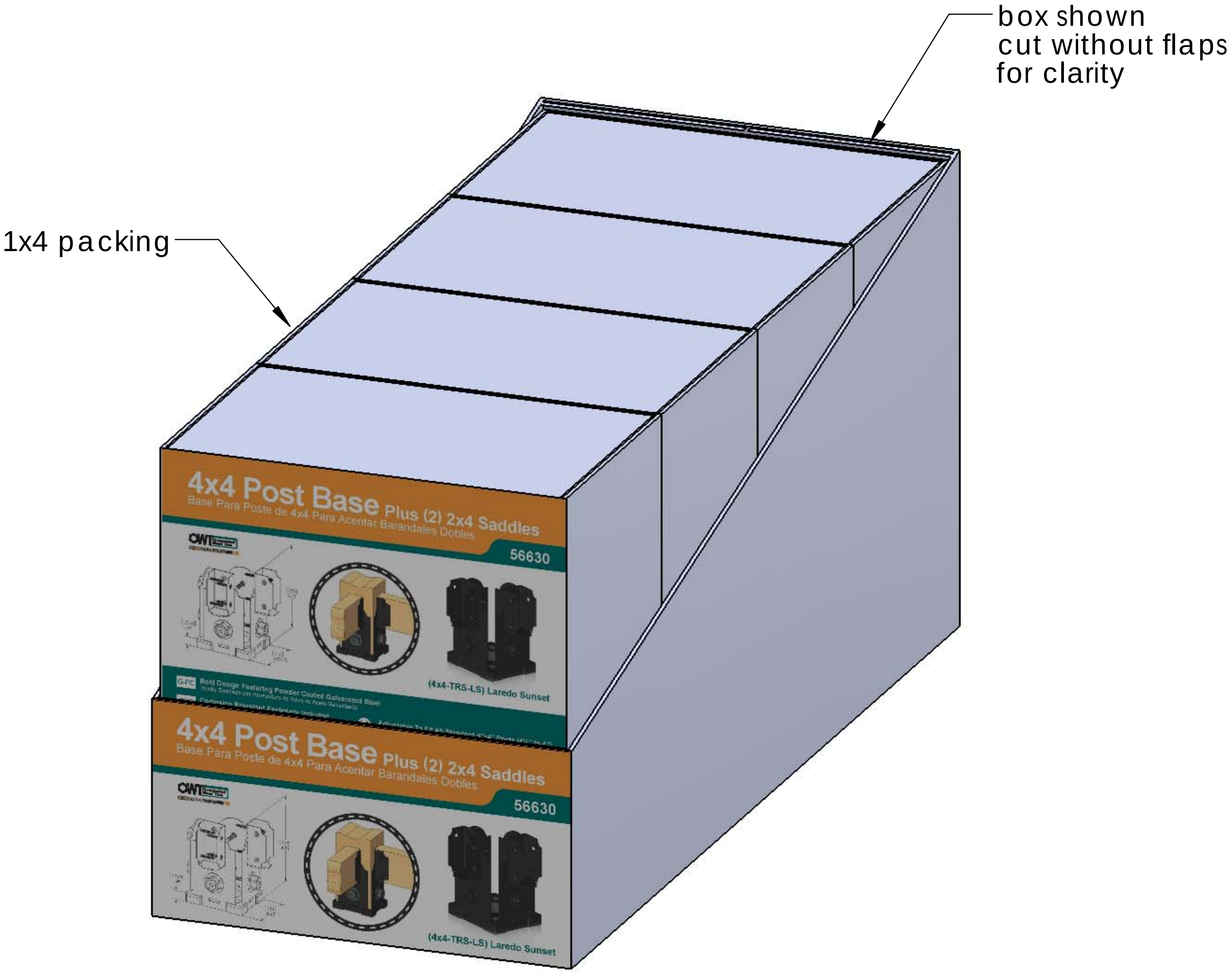
box shown
cut without flaps
for clarity
1x4 packing
4x4 Post Base Plus (2) 2x4 Saddles
Base Para Poste de 4x4 Para Acentar Barandales Dobles
56630
(4x4-TRS-LS) Laredo Sunset
4x4 Post Base Plus (2) 2x4 Saddles
Base Para Poste de 4x4 Para Acentar Barandales Dobles
56630
(4x4-TRS-LS) Laredo Sunset

Weight: 19.44 LBS
Scale: 1:3
Last updated: 7/14/2015

V1.00 - Installation Instructions effective May 1, 2015 and reflects information that available as of April 10, 2014. This information is updated periodically and should not be relied upon after May 1, 2015. Please visit www.OZCOBP.com to get current information

Product & Packaging Specs

56630 Packing

Item #: Pallet packing

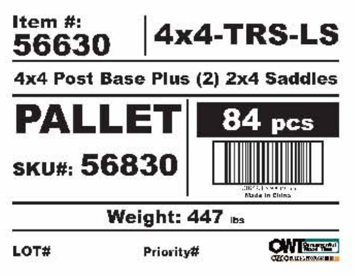

Item #:
56630 | **4x4-TRS-LS**

4x4 Post Base Plus (2) 2x4 Saddles

PALLET | **84 pcs**

SKU#: 56830

Made in China

Weight: 447 lbs

LOT# **Priority#**

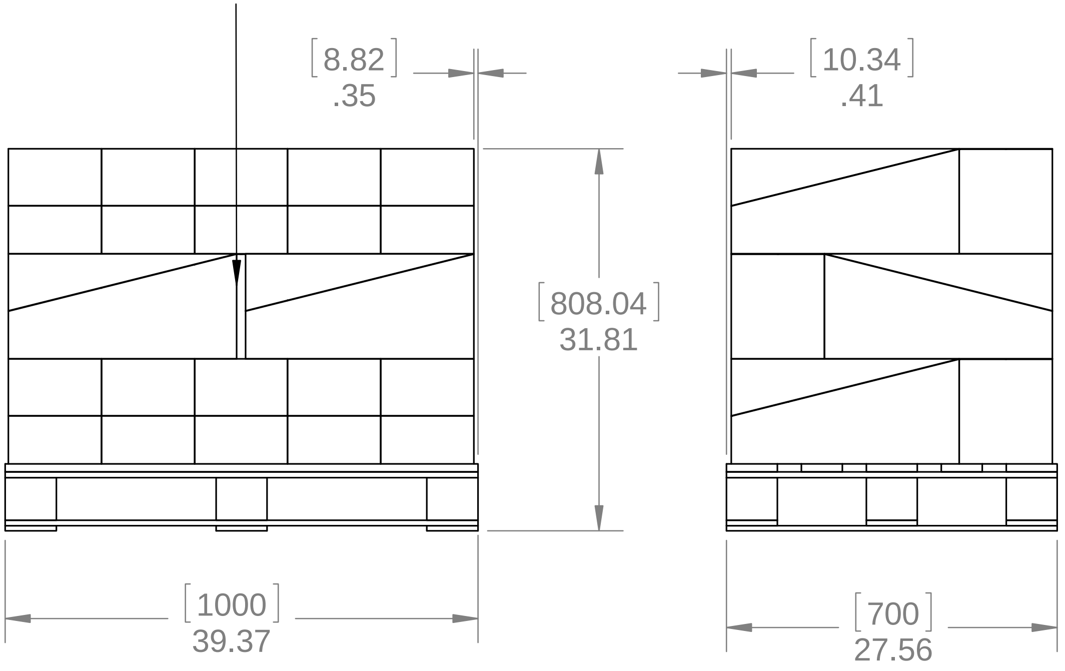

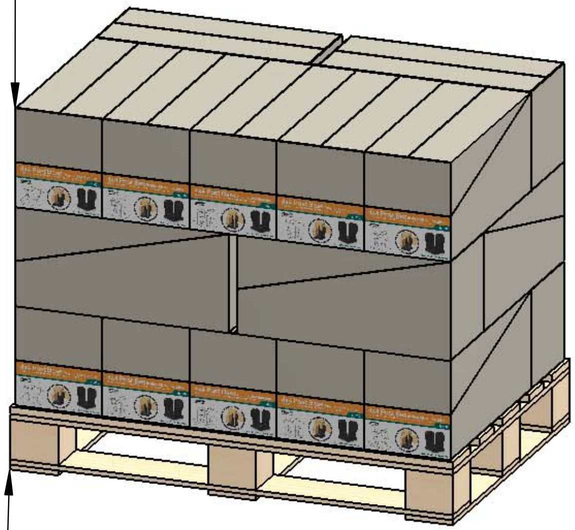

Total number of cases: 21
Total number of pieces:
21x4=84 pieces on pallet

I pallet

CERTIFIED

additional pallet packing instructions

- plywood on top layer
- strap to pallet
- clear wrap around boxes

Weight: 447 LBS
Scale: 1:16
Last updated: 7/14/2015

V1.00 - Installation Instructions effective May 1, 2015 and reflects information that available as of April 10, 2014. This information is updated periodically and should not be relied upon after May 1, 2015. Please visit www.OZCOBP.com to get current information