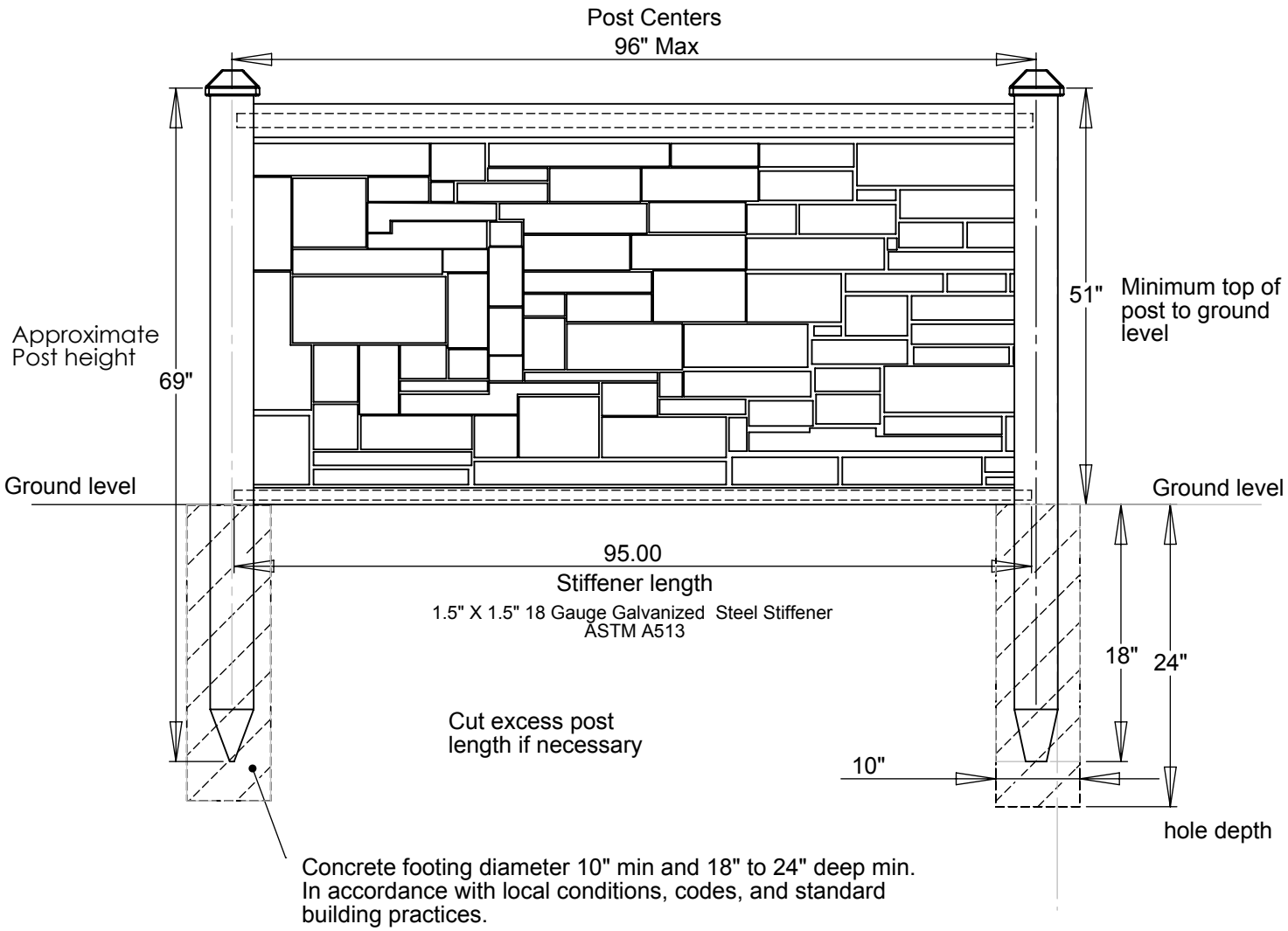

- Actual Panel Dimensions: 48"H X 94.25"W
- Panel Weight 60lbs.
- Tolerances are ±.25"

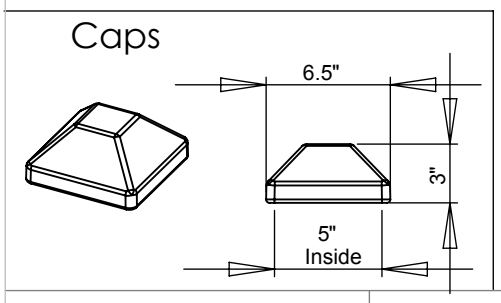

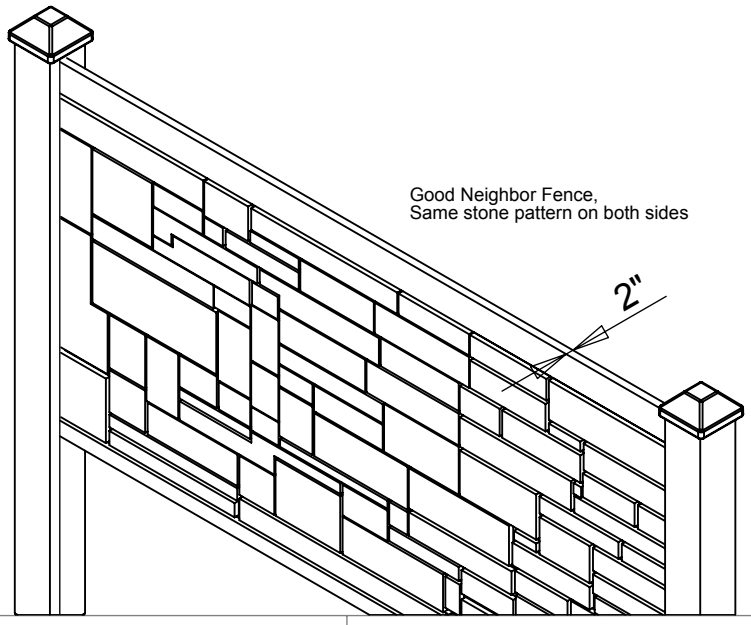

Model #:FP96X48 E	This drawing may not be altered or reproduced without the permission of SimTek™ Fence	
Date: January 3, 2011	Scale: not to scale	REV: GF
Sheet 1 of 1	**U.S. Patents: 7,478,797 / 7,635,114 Foreign Patents Pending**	

EcoStone

www.ecostonefence.com