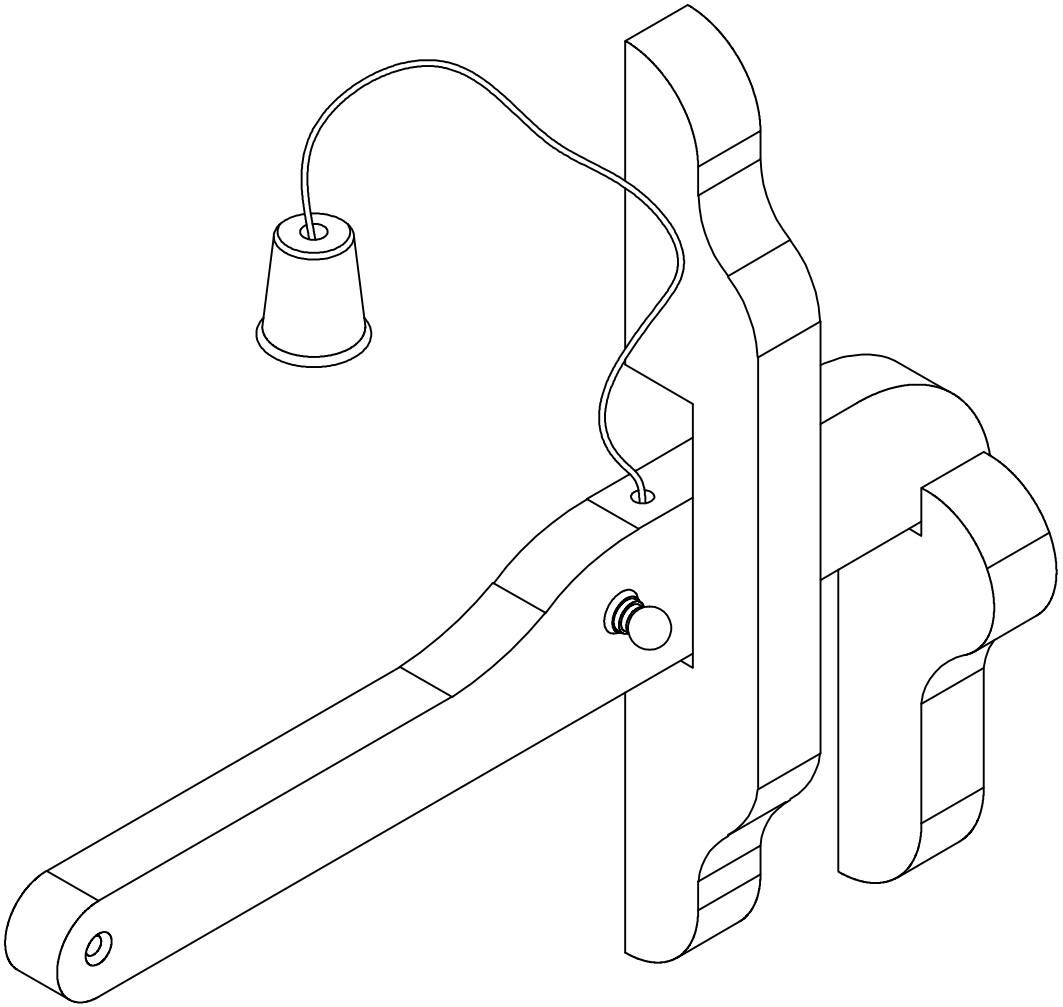

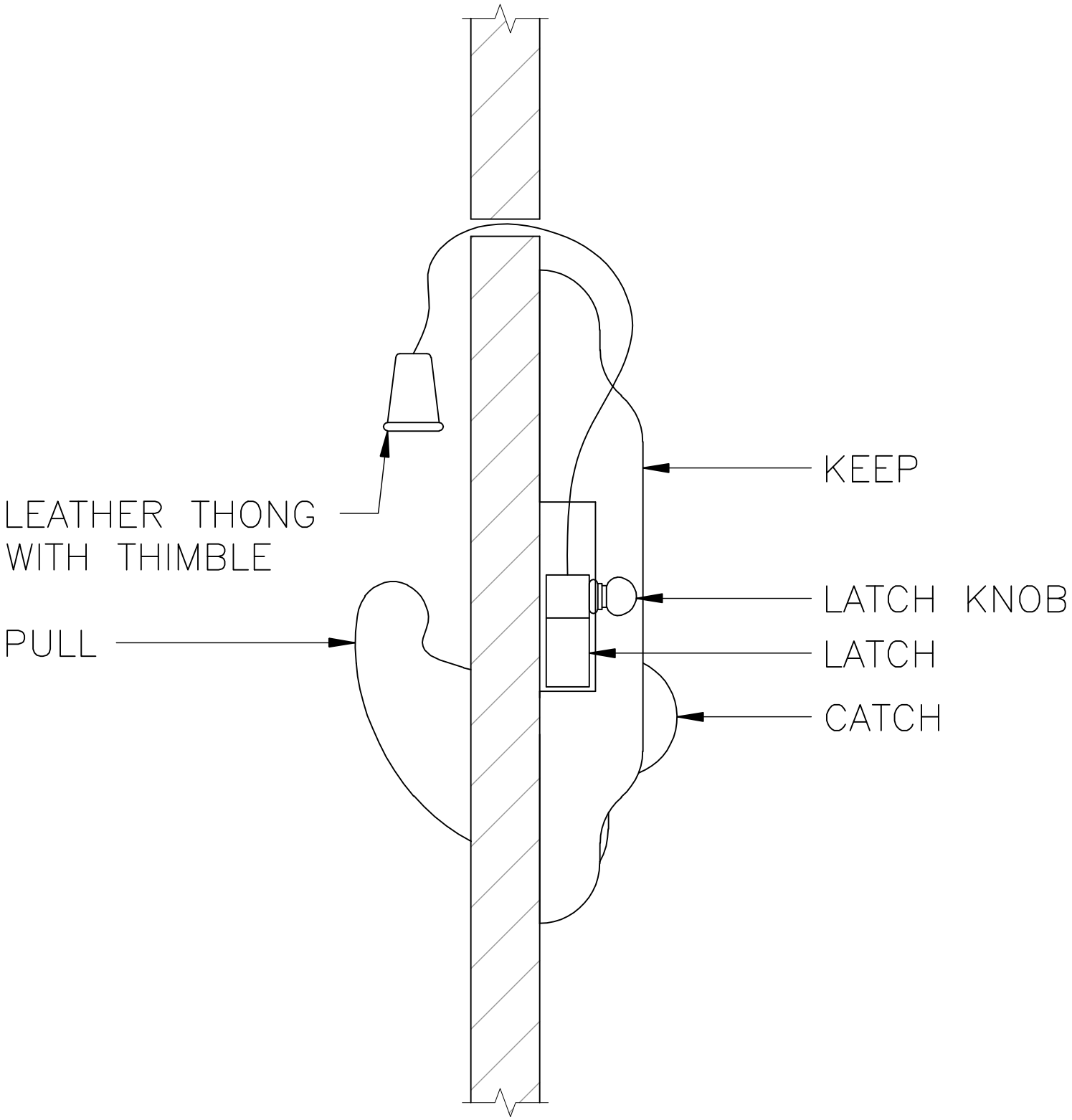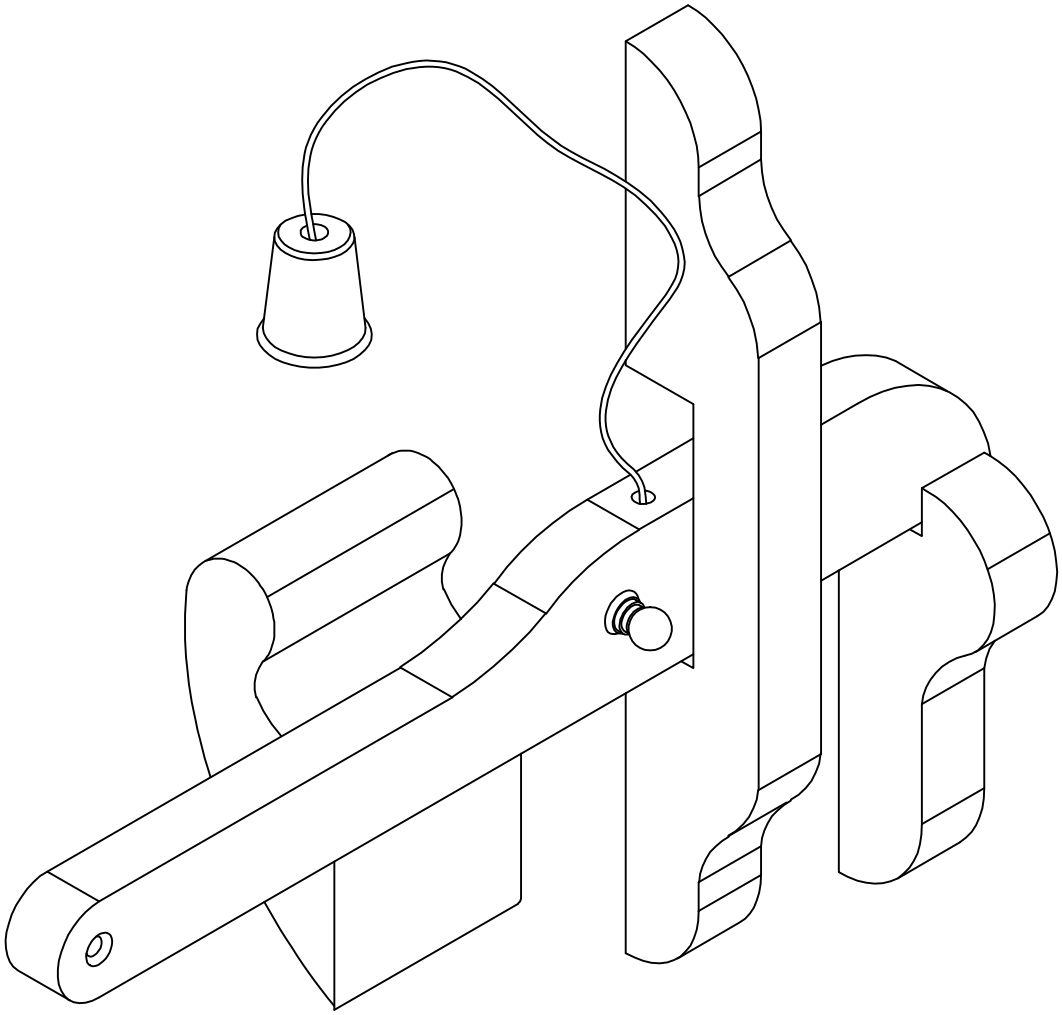
KEEP
LEATHER THONG
WITH THIMBLE
LATCH KNOB
PULL
LATCH
CATCH