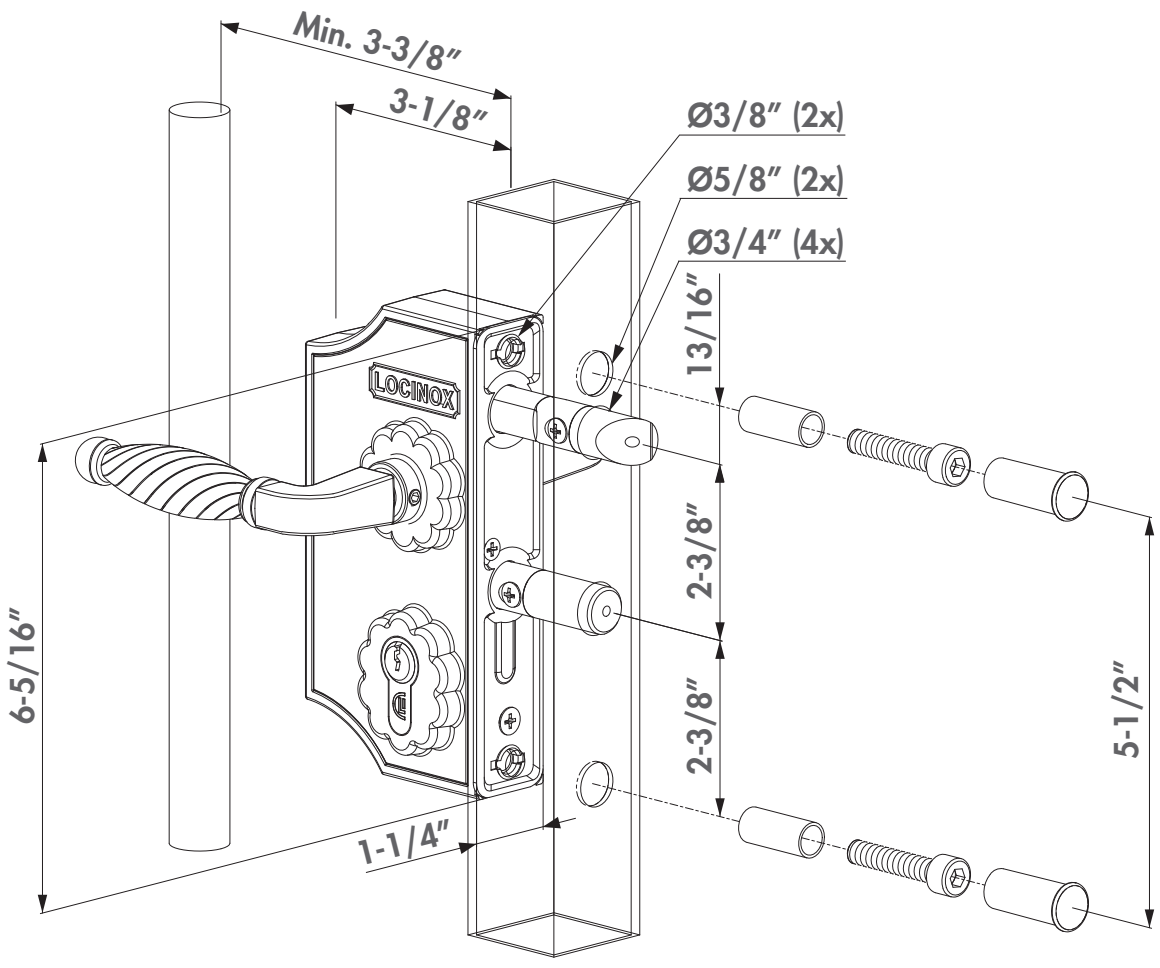
Min. 3-3/8″
3-1/8″
Ø3/8″ (2x)
Ø5/8″ (2x)
Ø3/4″ (4x)
13/16″
2-3/8″
2-3/8″
5-1/2″
6-5/16″
1-1/4″
LOCINOX