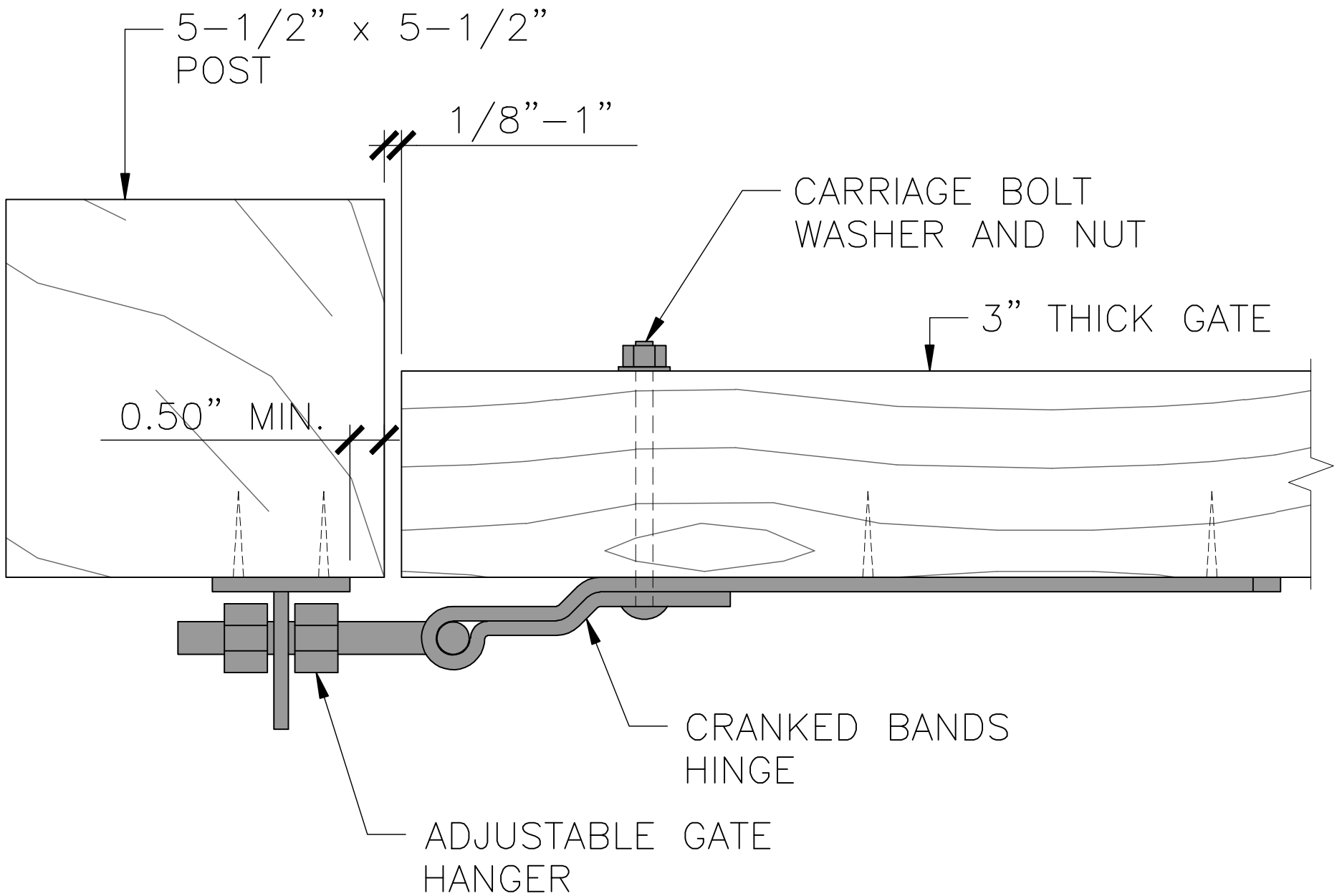

PROPERTY OF:	PRODUCT DESCRIPTION:	PART NUMBER:
SNUG COTTAGE HARDWARE LLC MARYSVILLE MI. 48040	CRANKED BANDS HINGE – FLUSH MOUNT WITH ADJUSTABLE PIN ALL DIMENSIONS ±0.125"	8295-12A2/12ASP

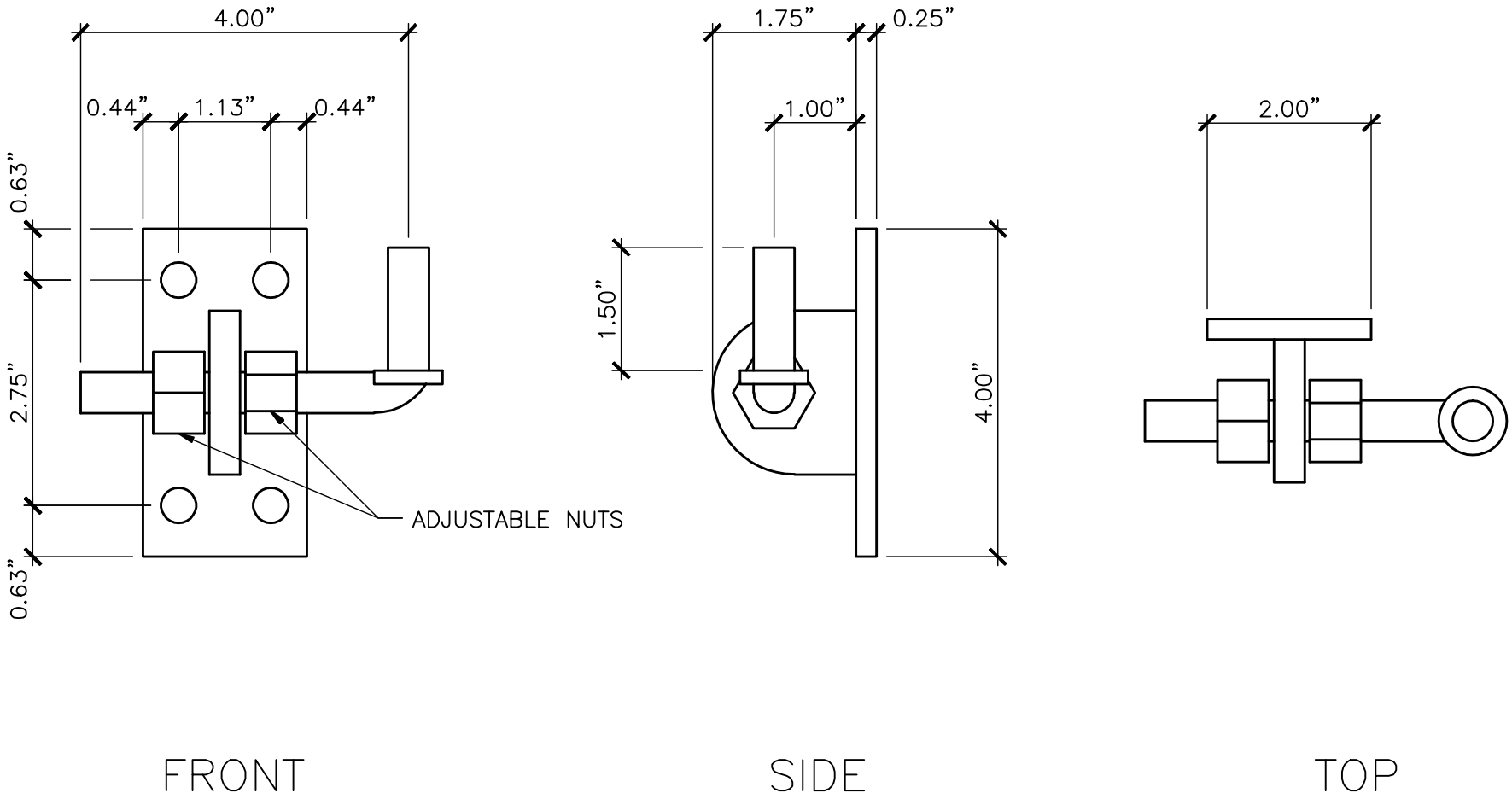

PROPERTY OF:	PRODUCT DESCRIPTION:	PART NUMBER:
SNUG COTTAGE HARDWARE LLC MARYSVILLE MI. 48040	1/2” ADJUSTABLE GATE HANGER ON 4” x 2” PLATE ALL DIMENSIONS ±0.125”	8295–ADJUSTABLE PIN